
SOPHOS
SOPHOS

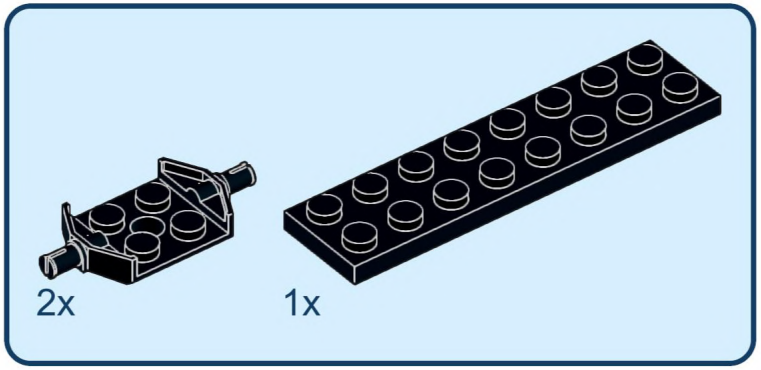

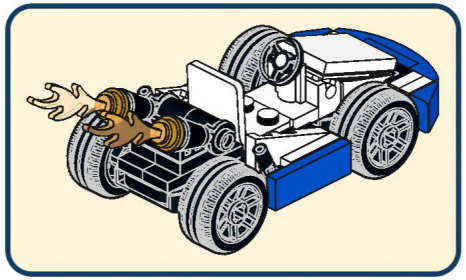

1

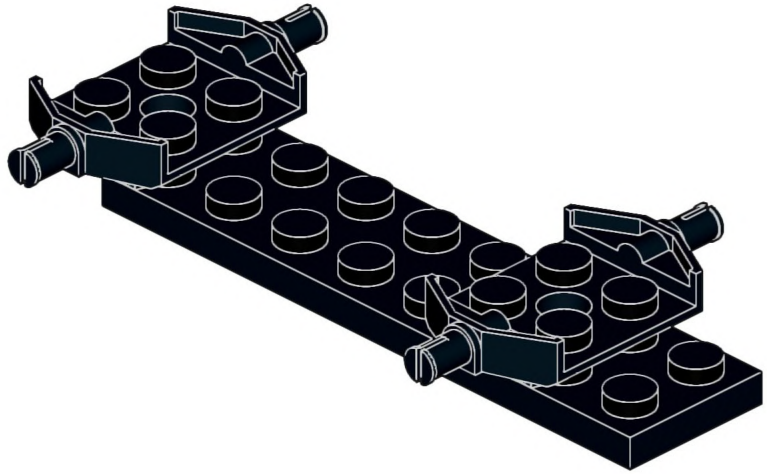

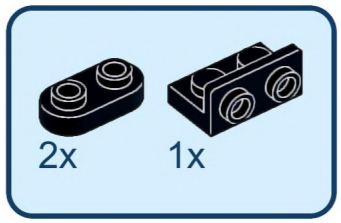

2

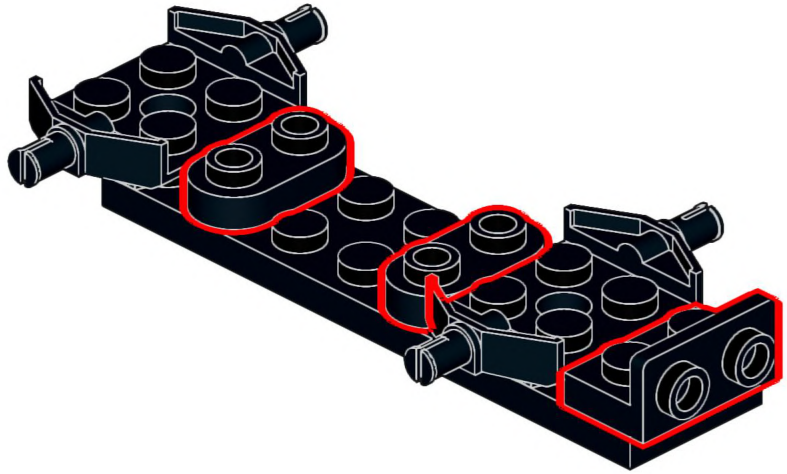



3

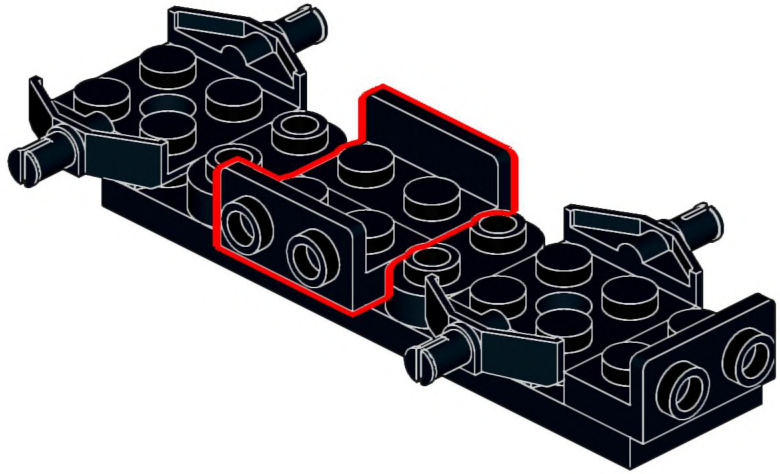

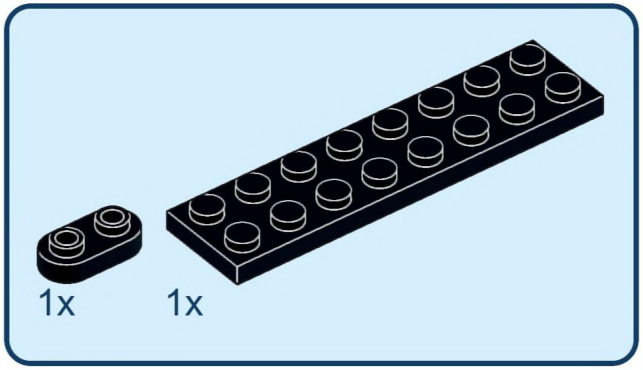

4

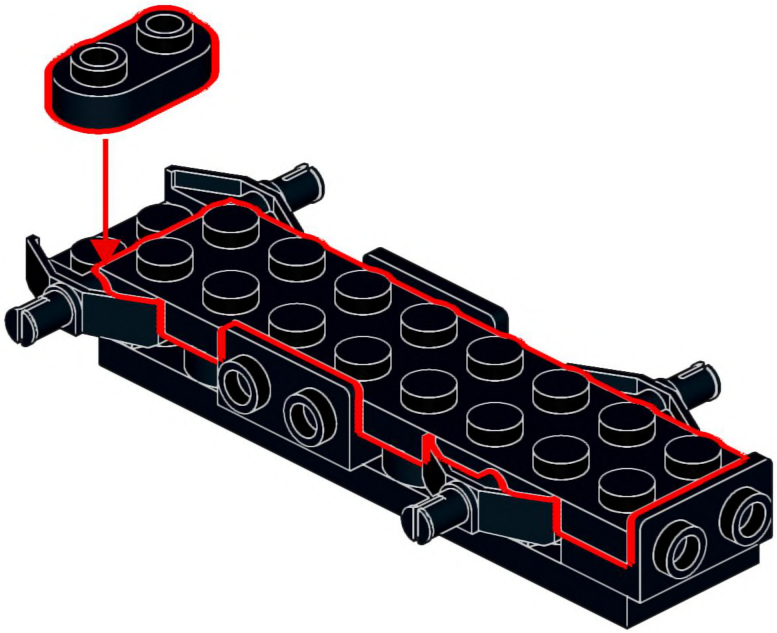

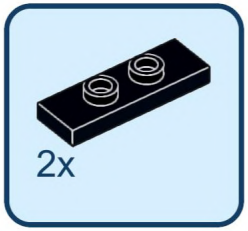

5

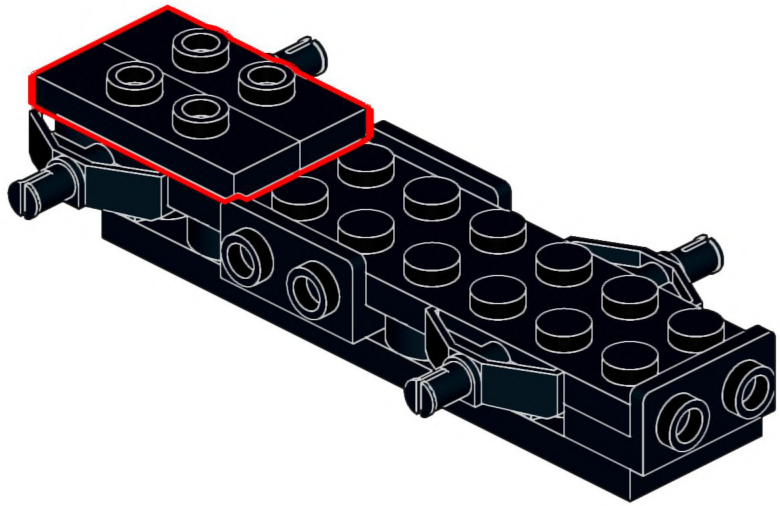

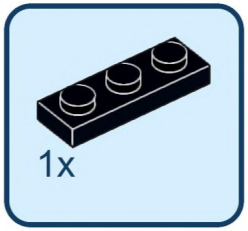

6

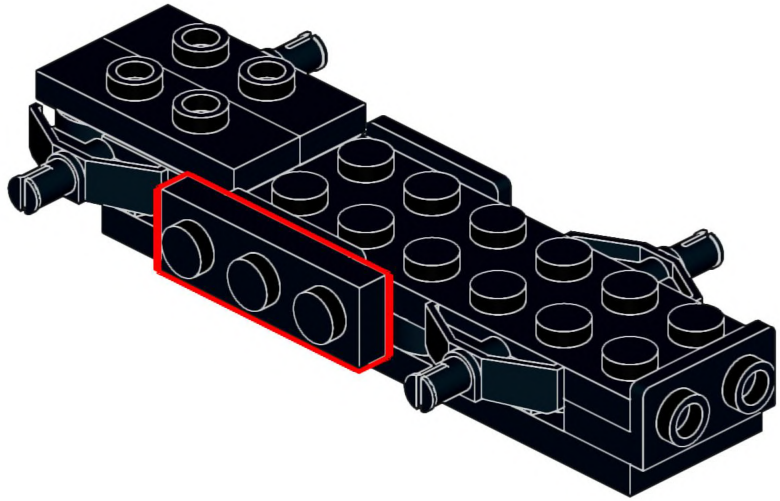

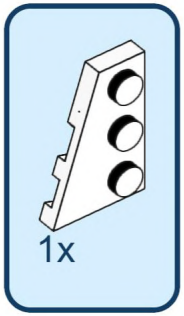

7

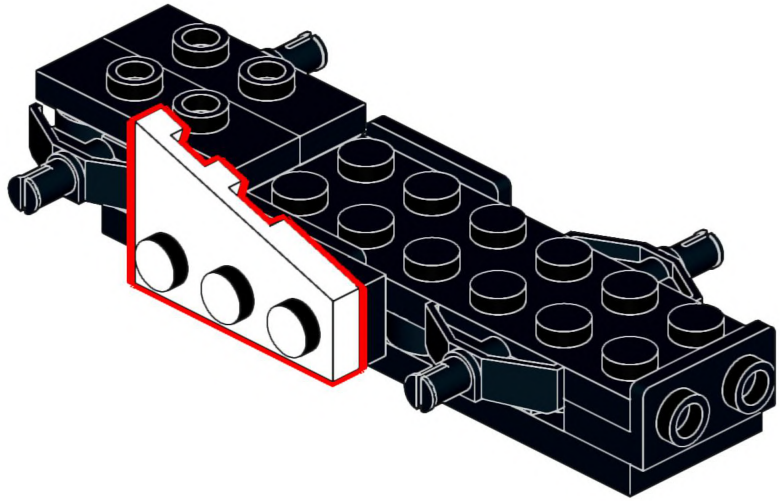

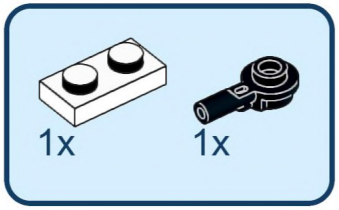

8

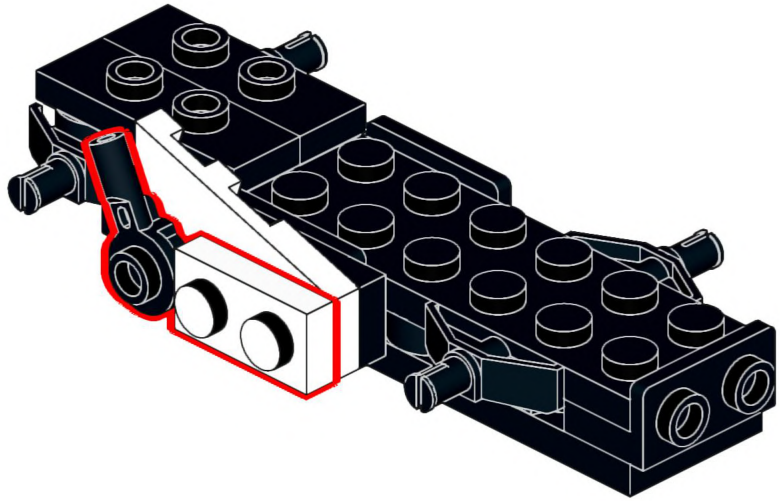

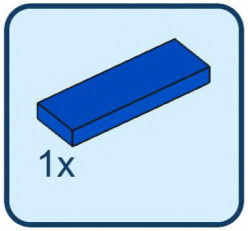

9

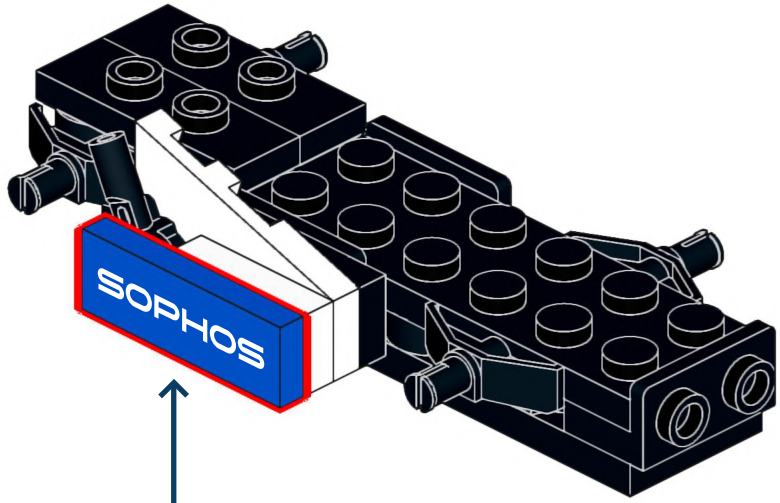



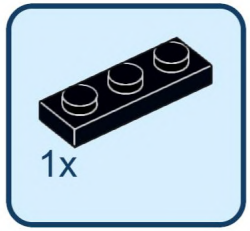



10

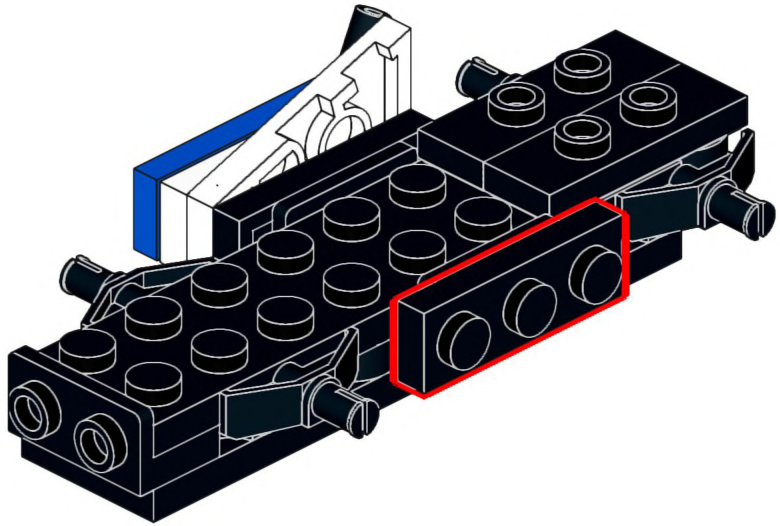

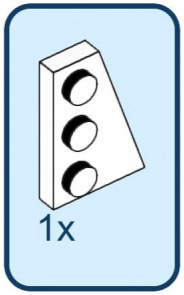

11

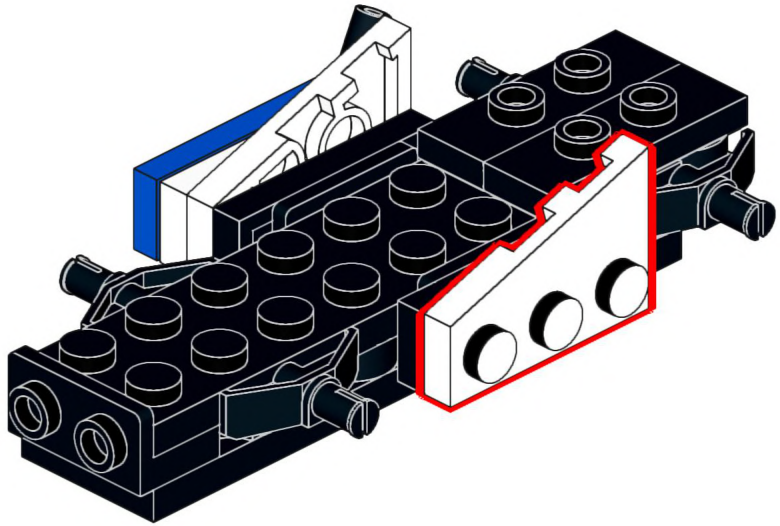

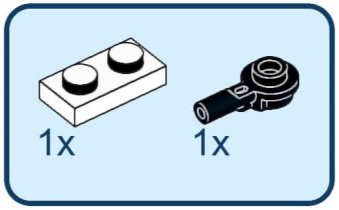

12

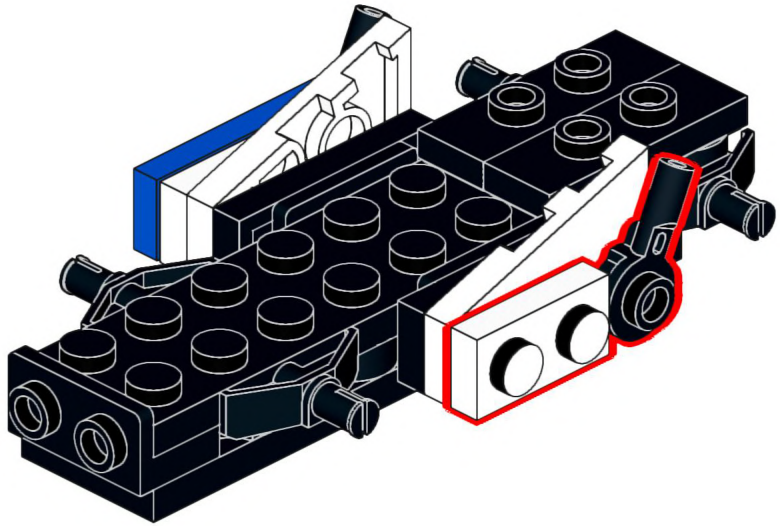

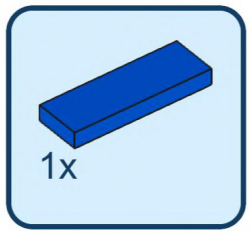

13

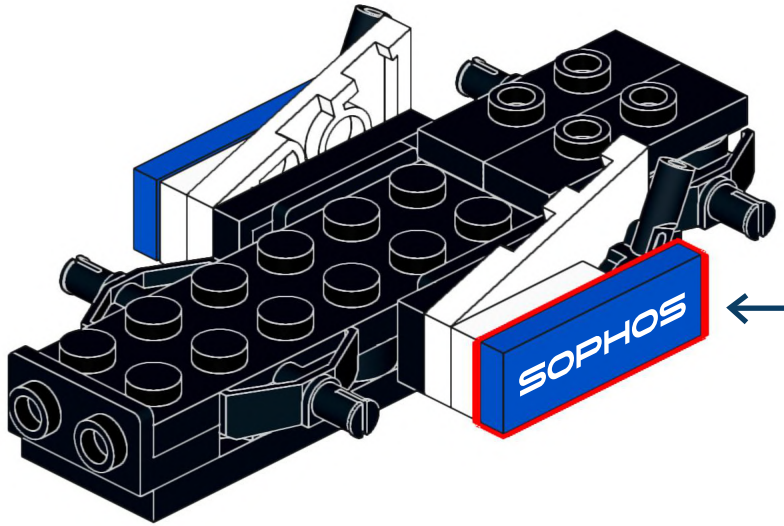

APPLY STICKER

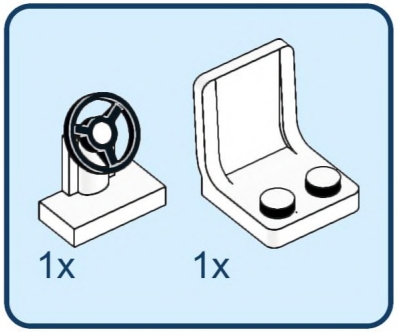

14

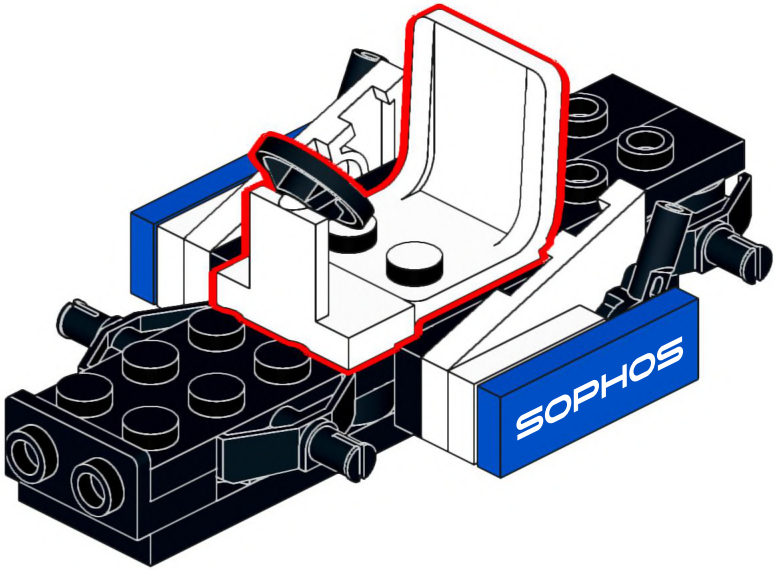

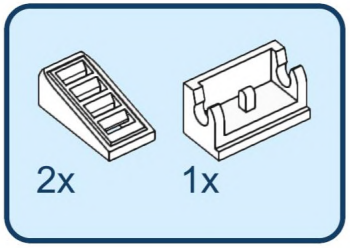

15

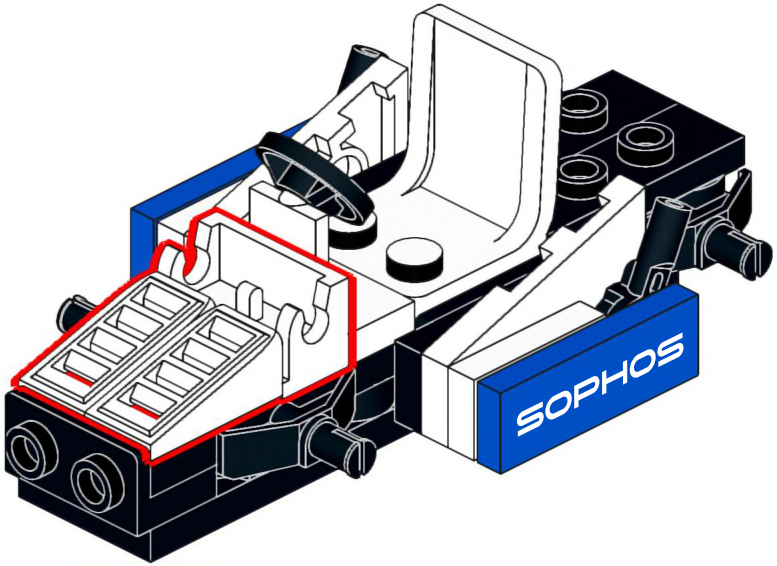

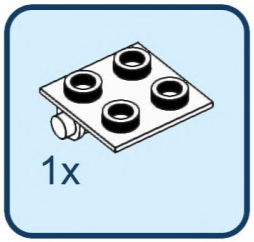

16

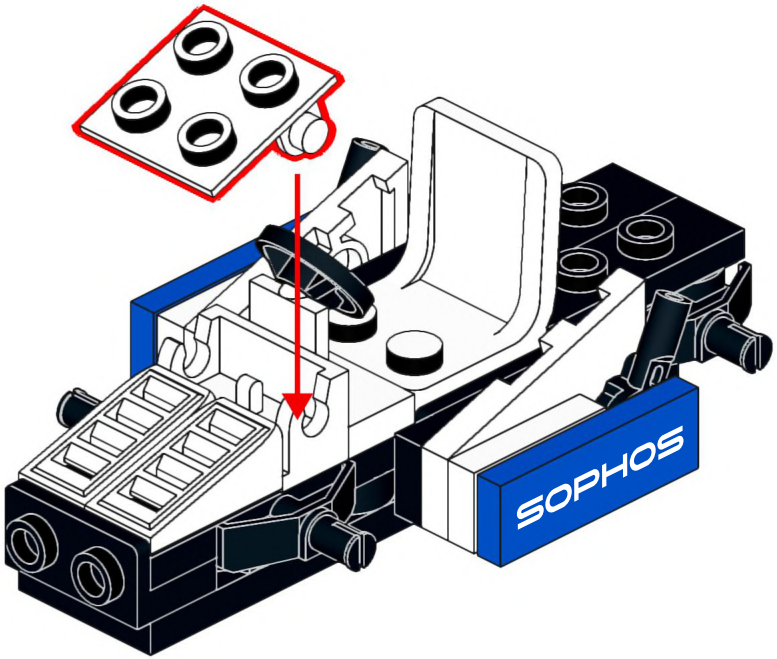

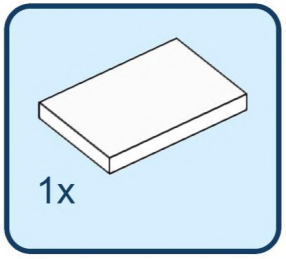

17

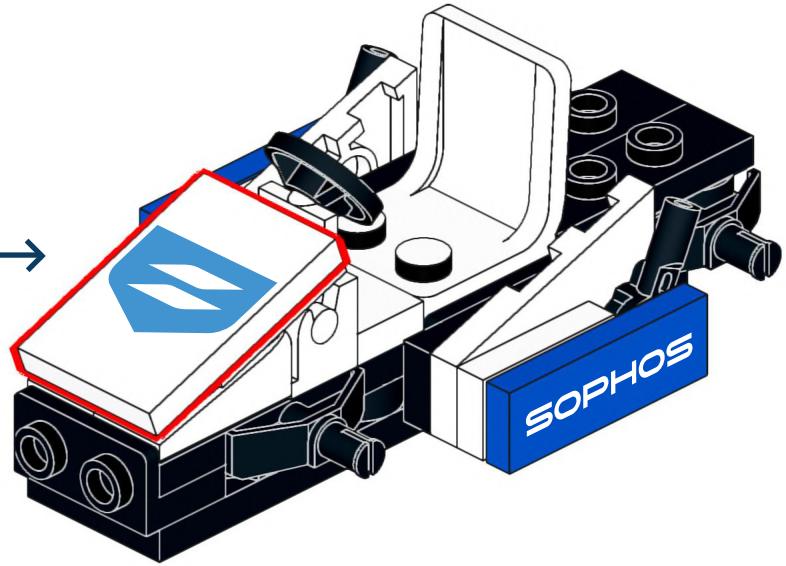





18

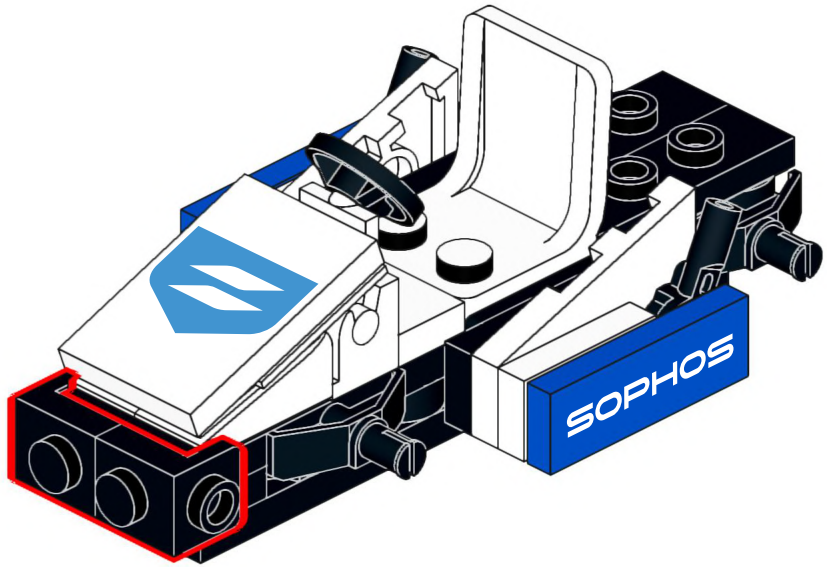

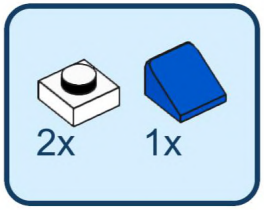

19

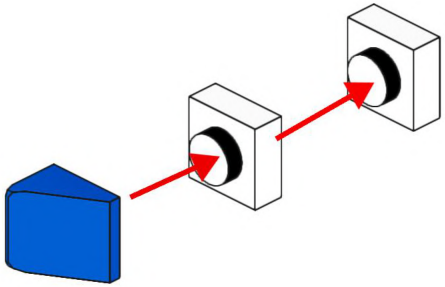

2x 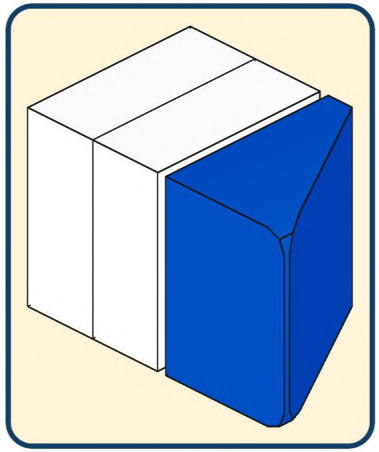

20

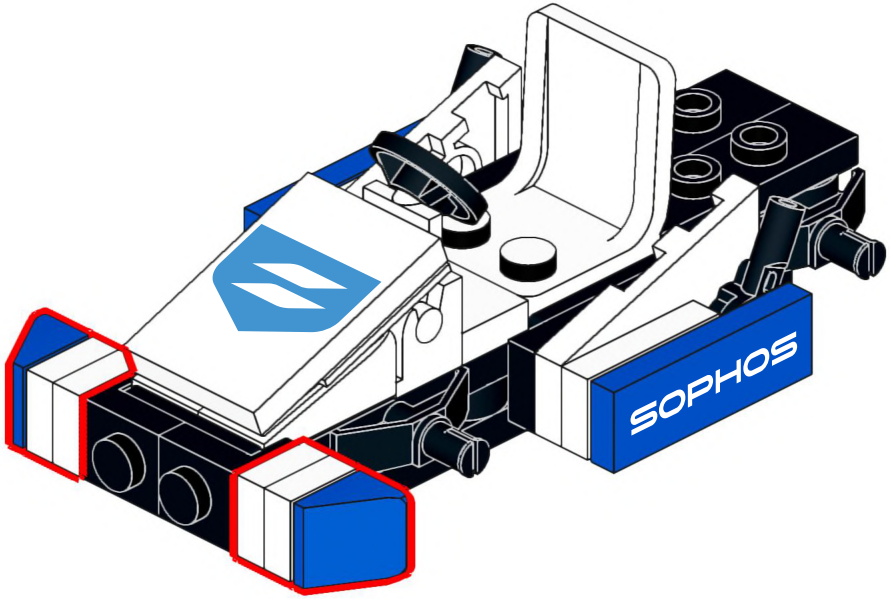

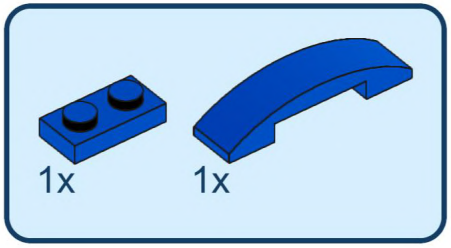

21

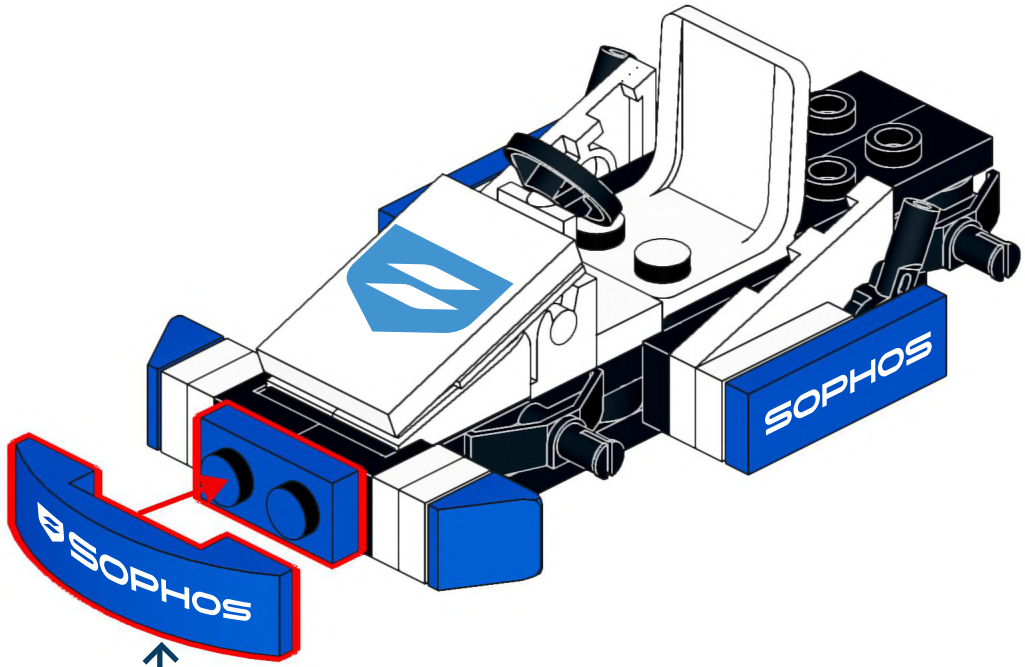

APPLY STICKER





22

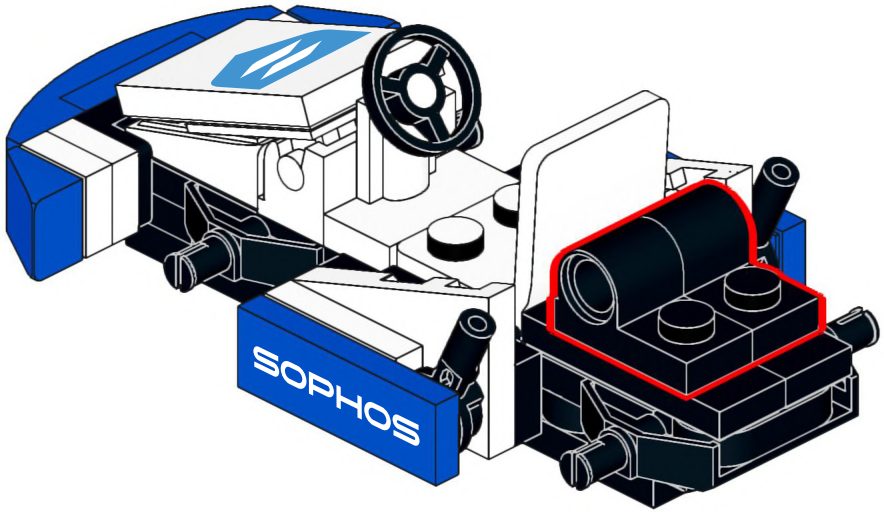

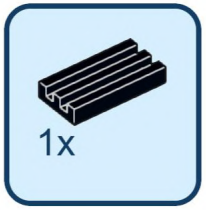

23

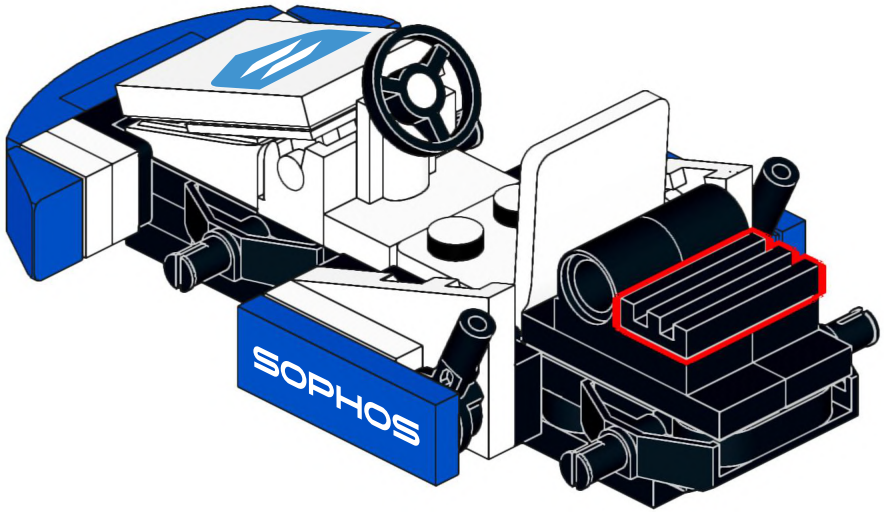

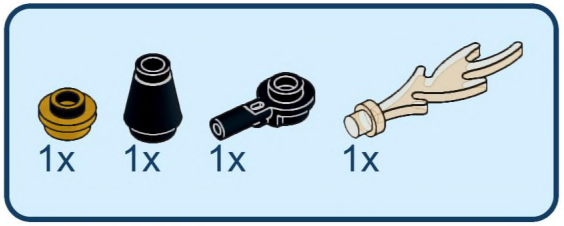

24

2x 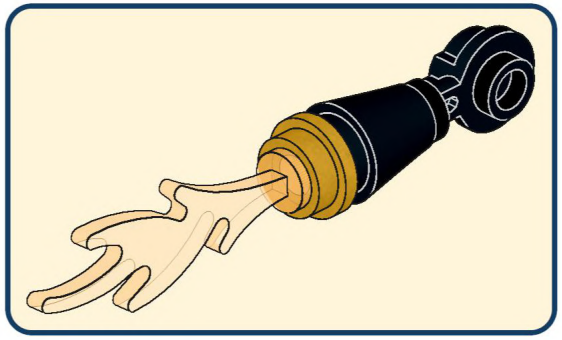

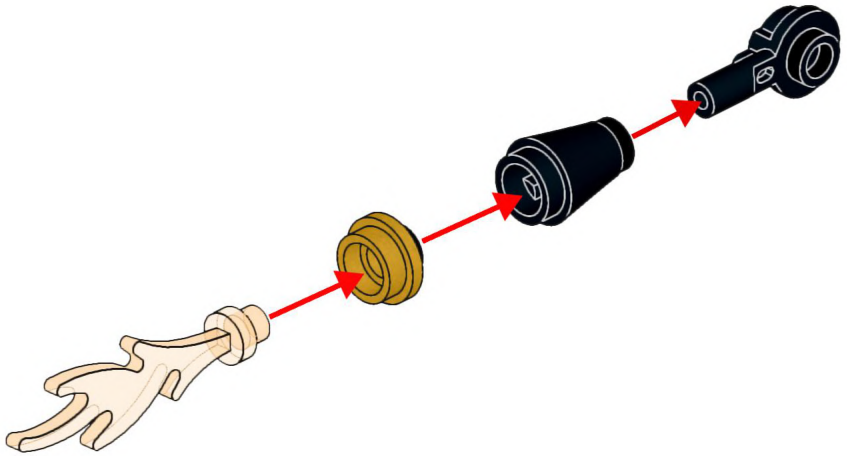

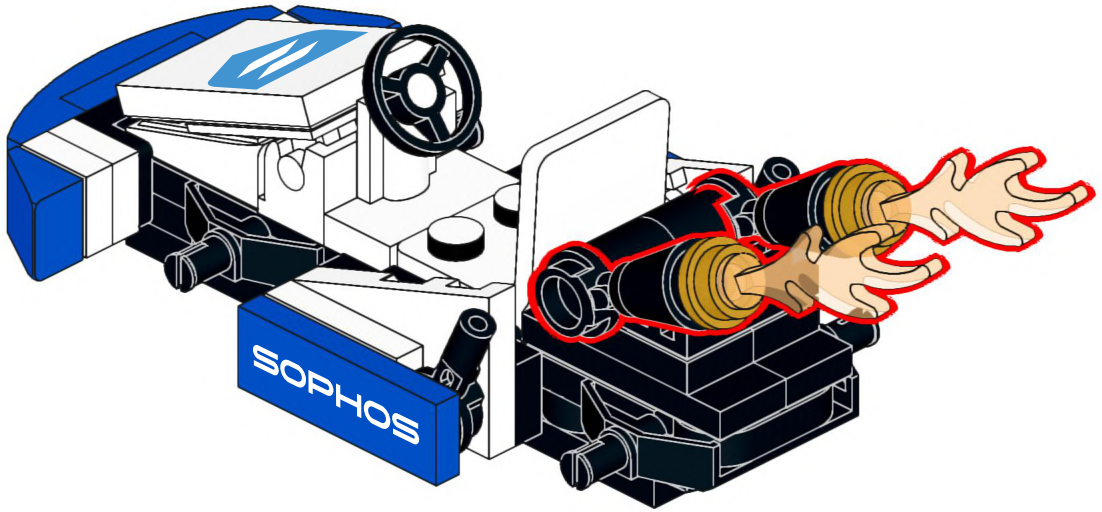
SOPHOS



26

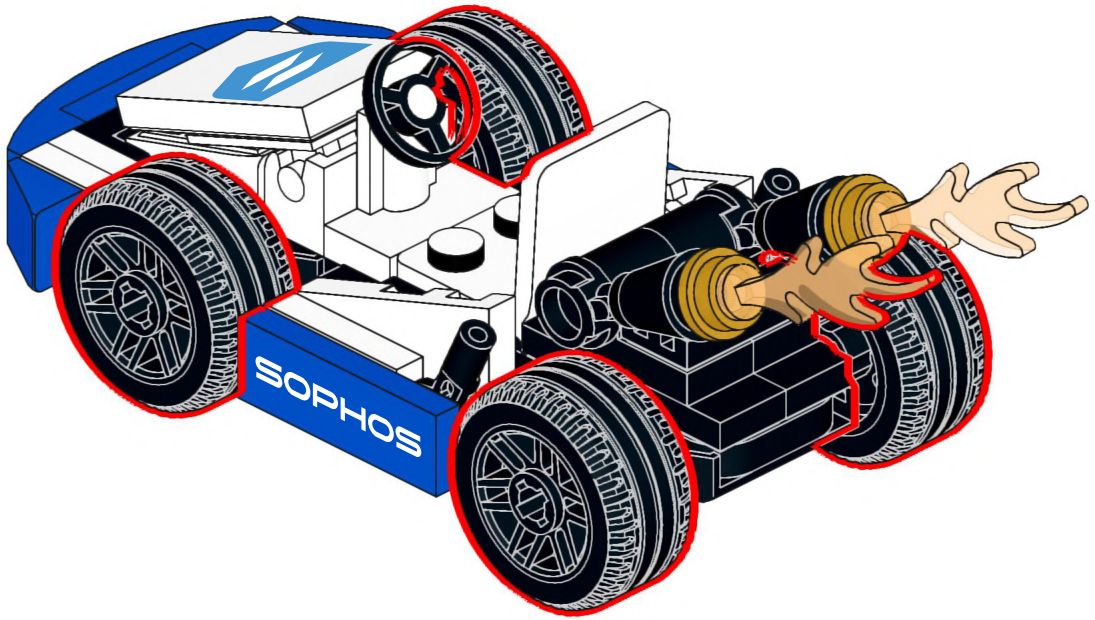

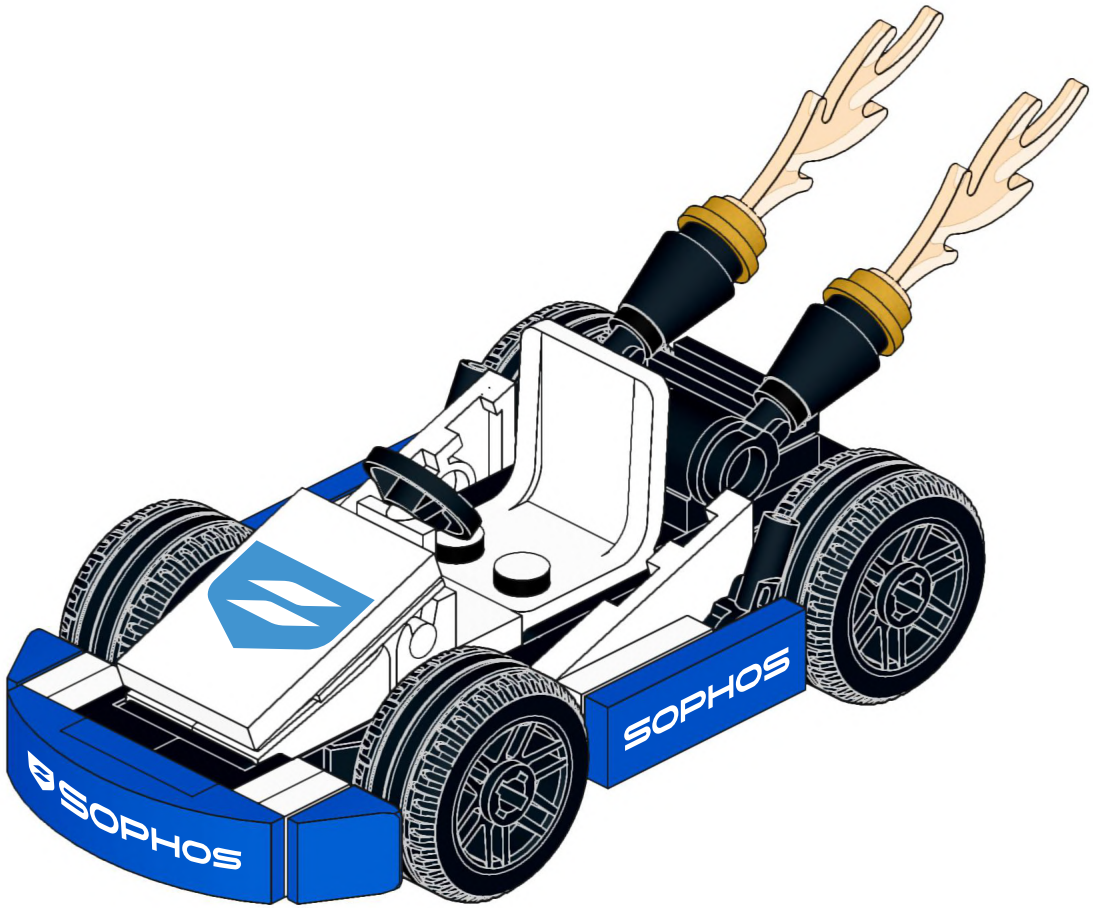

1

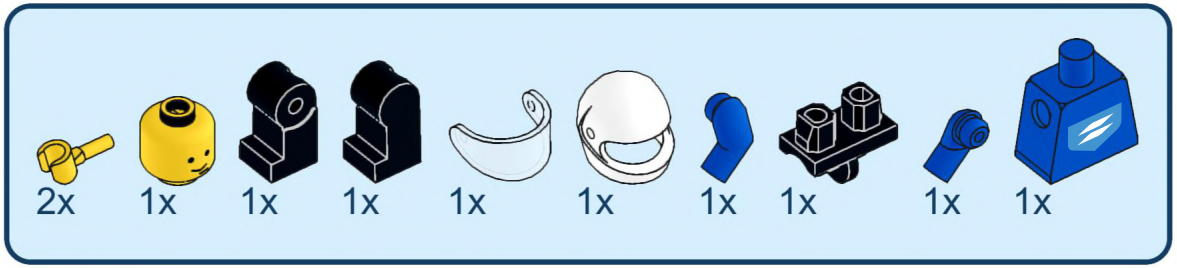

28





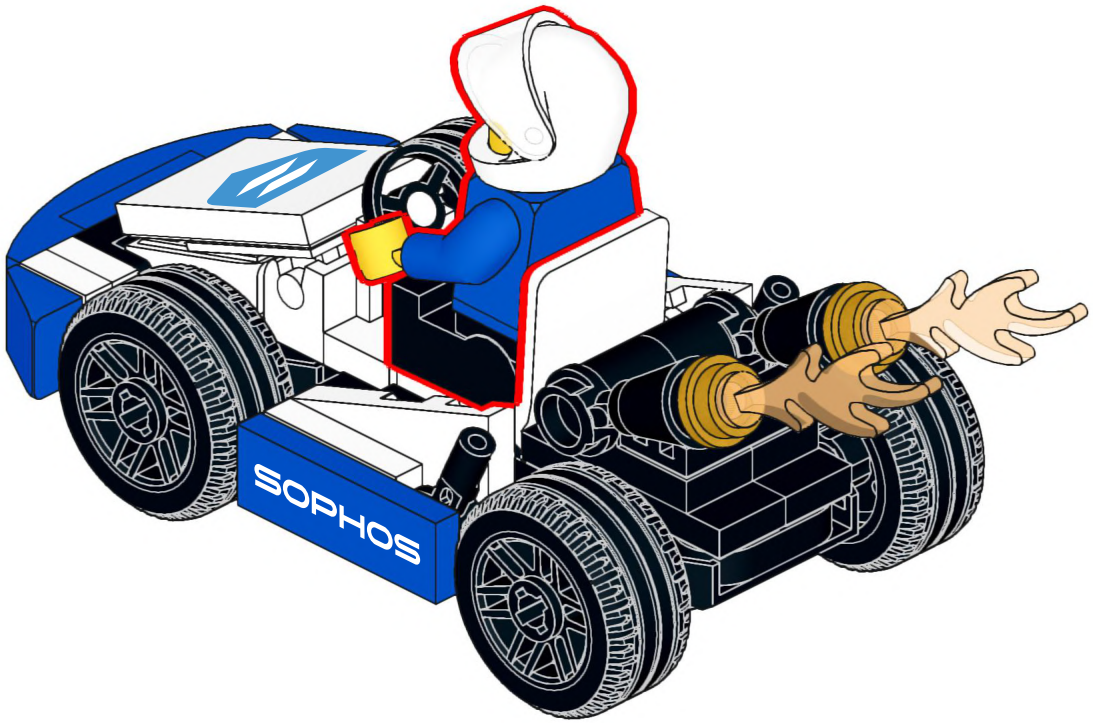
SOPHOS


SOPHOS
SOPHOS

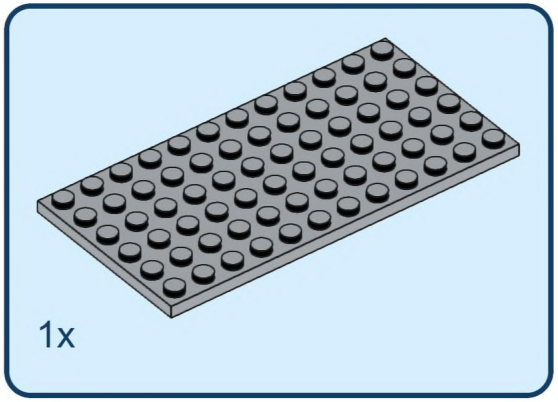

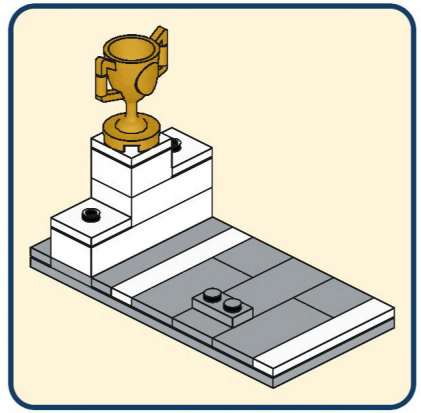

31

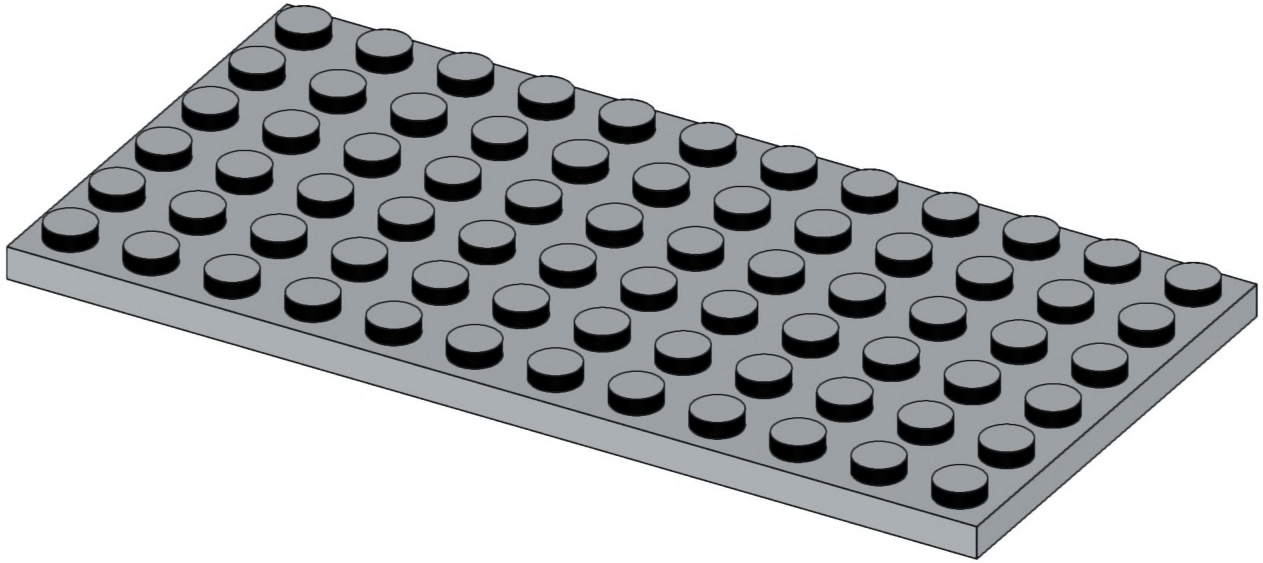

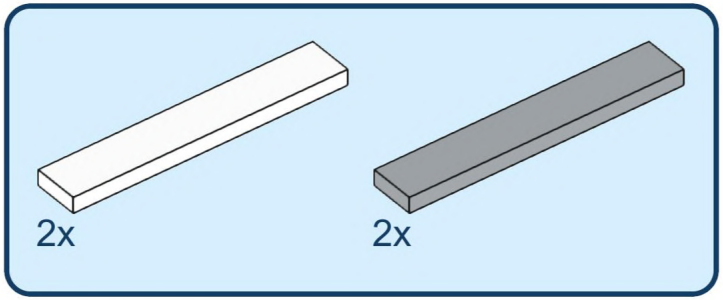

32

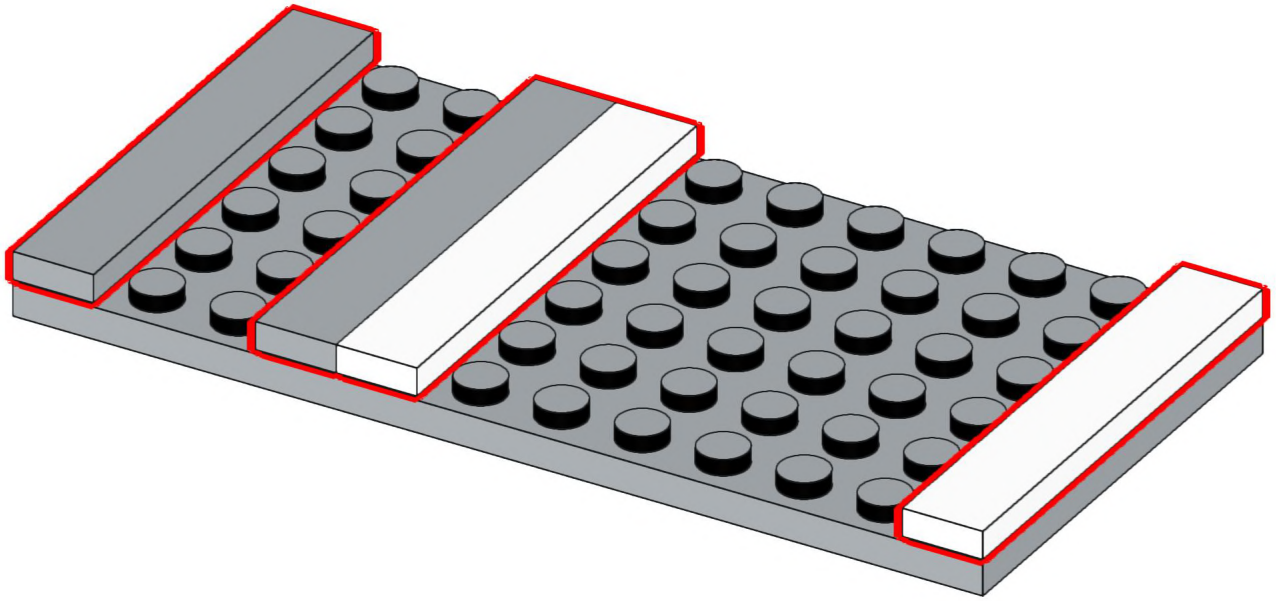

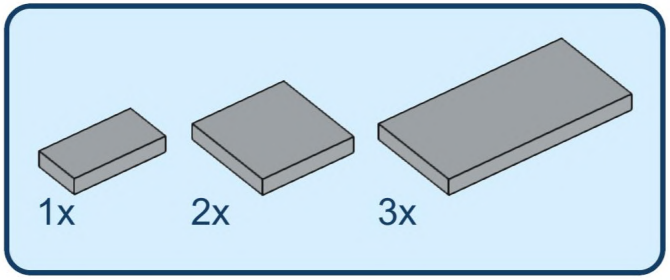

33

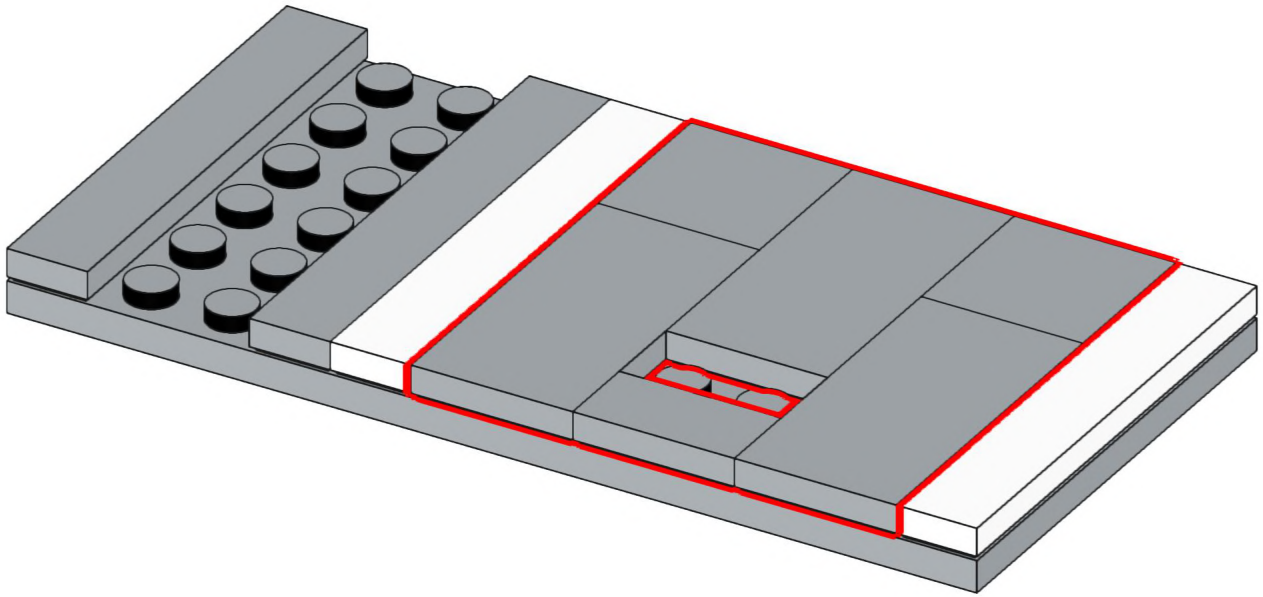

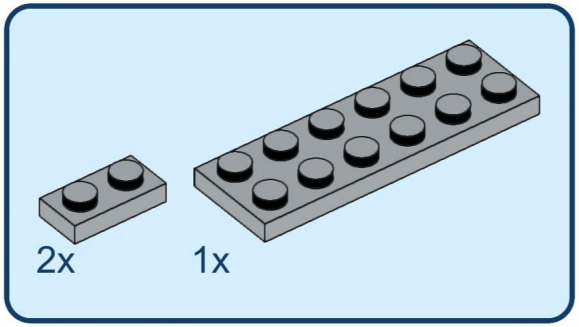

34

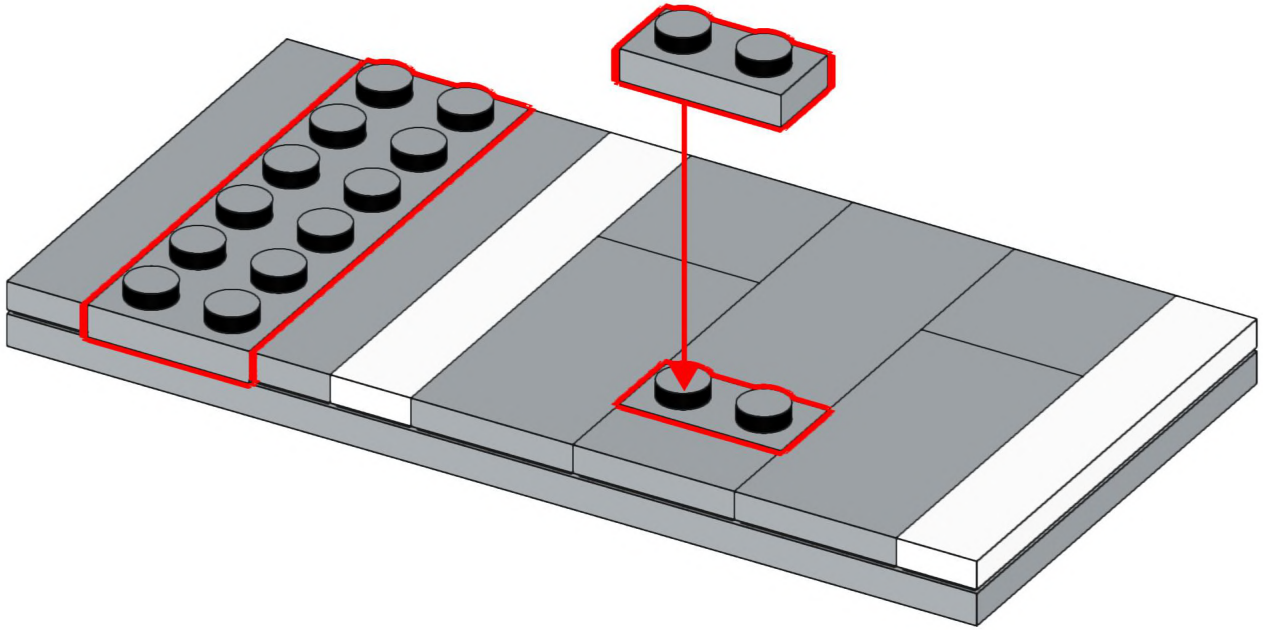

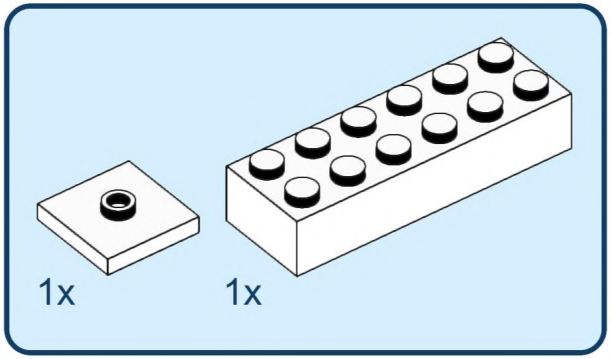

35

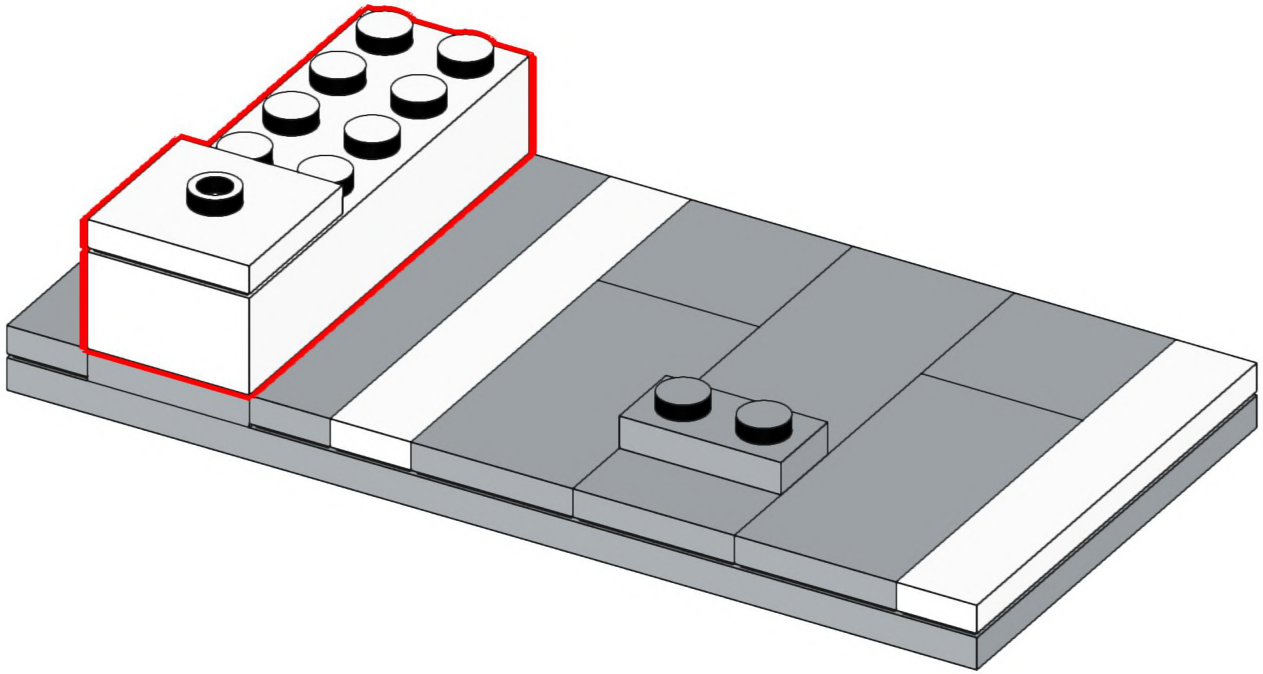

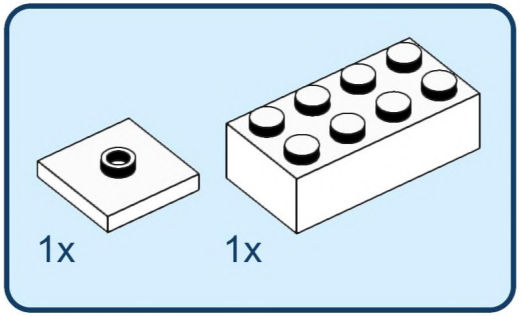

36

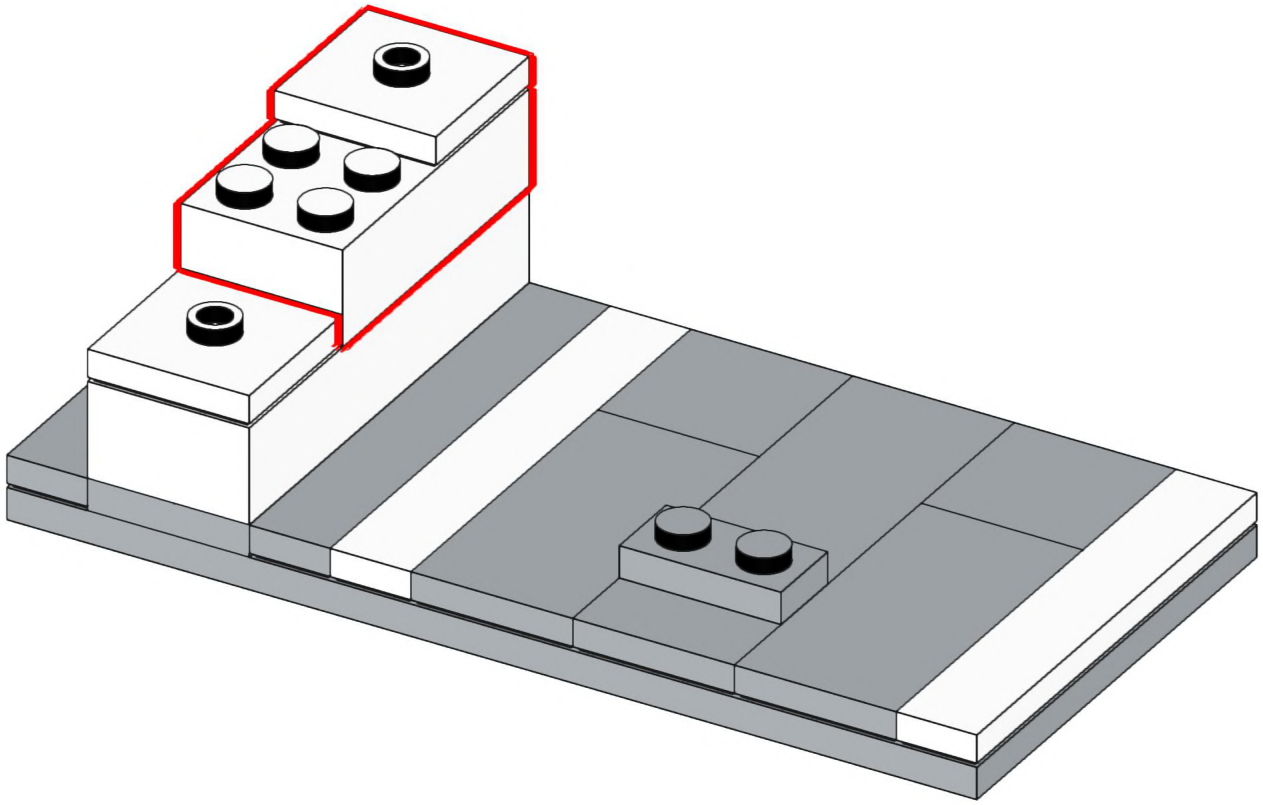

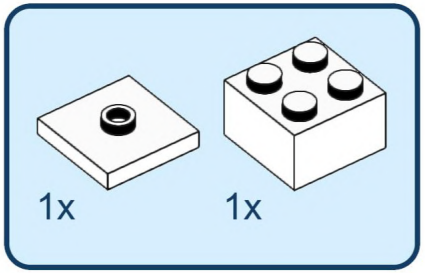

37

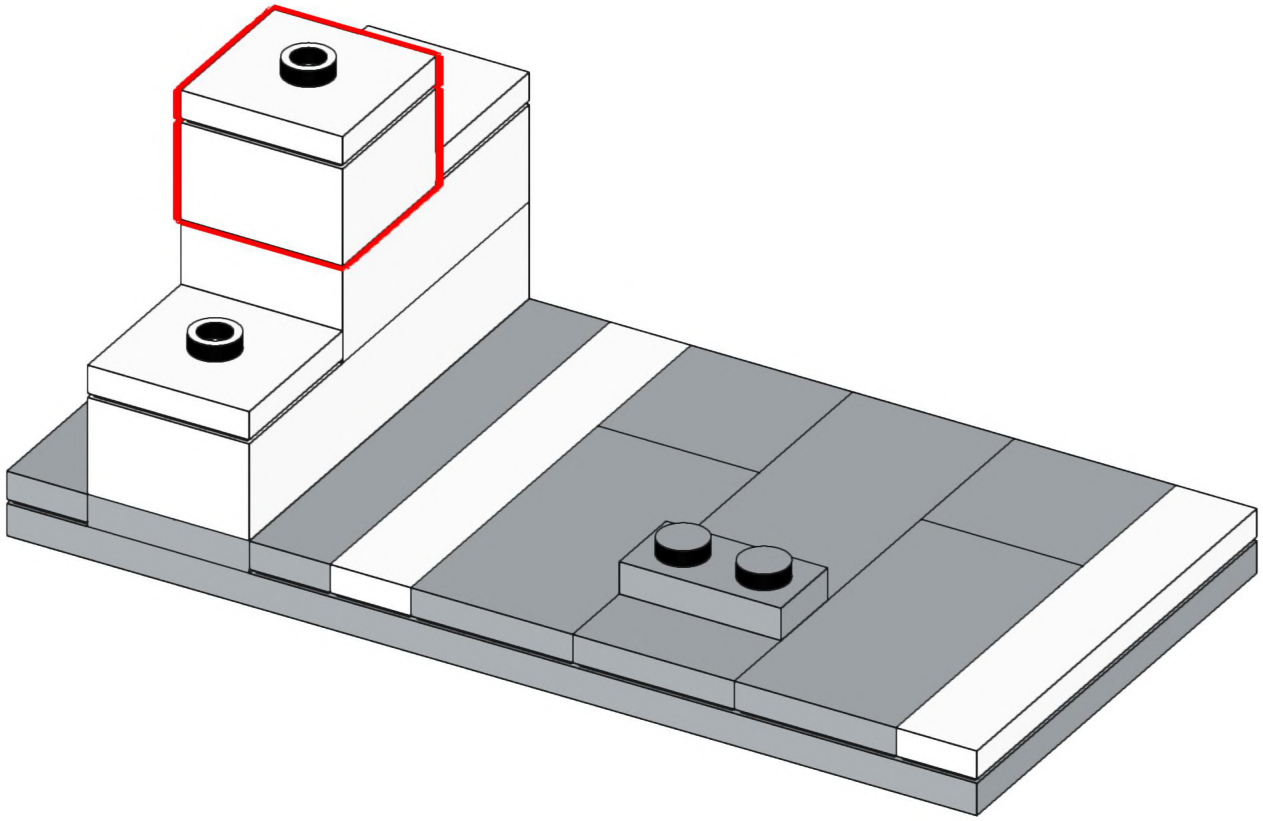



38

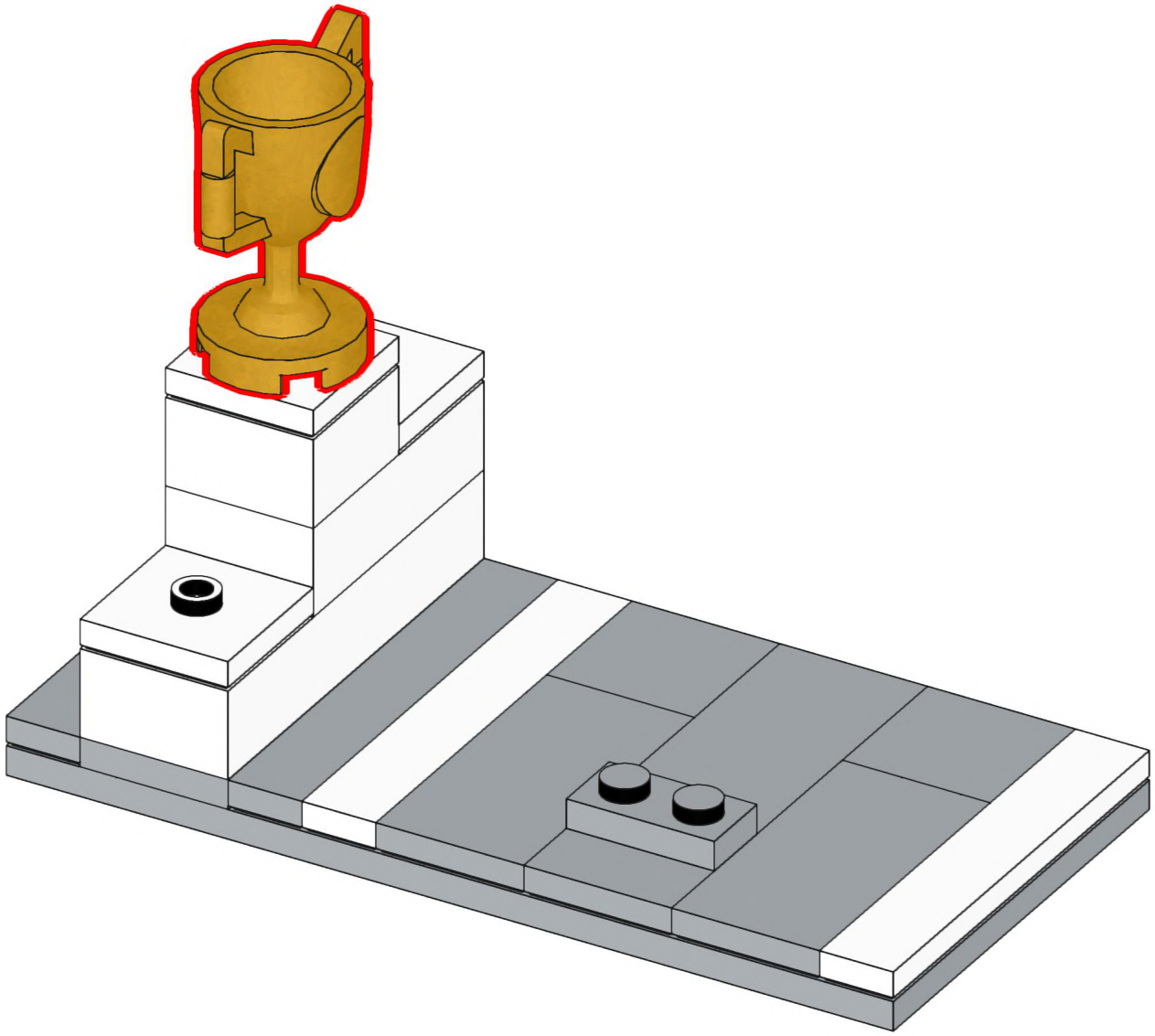

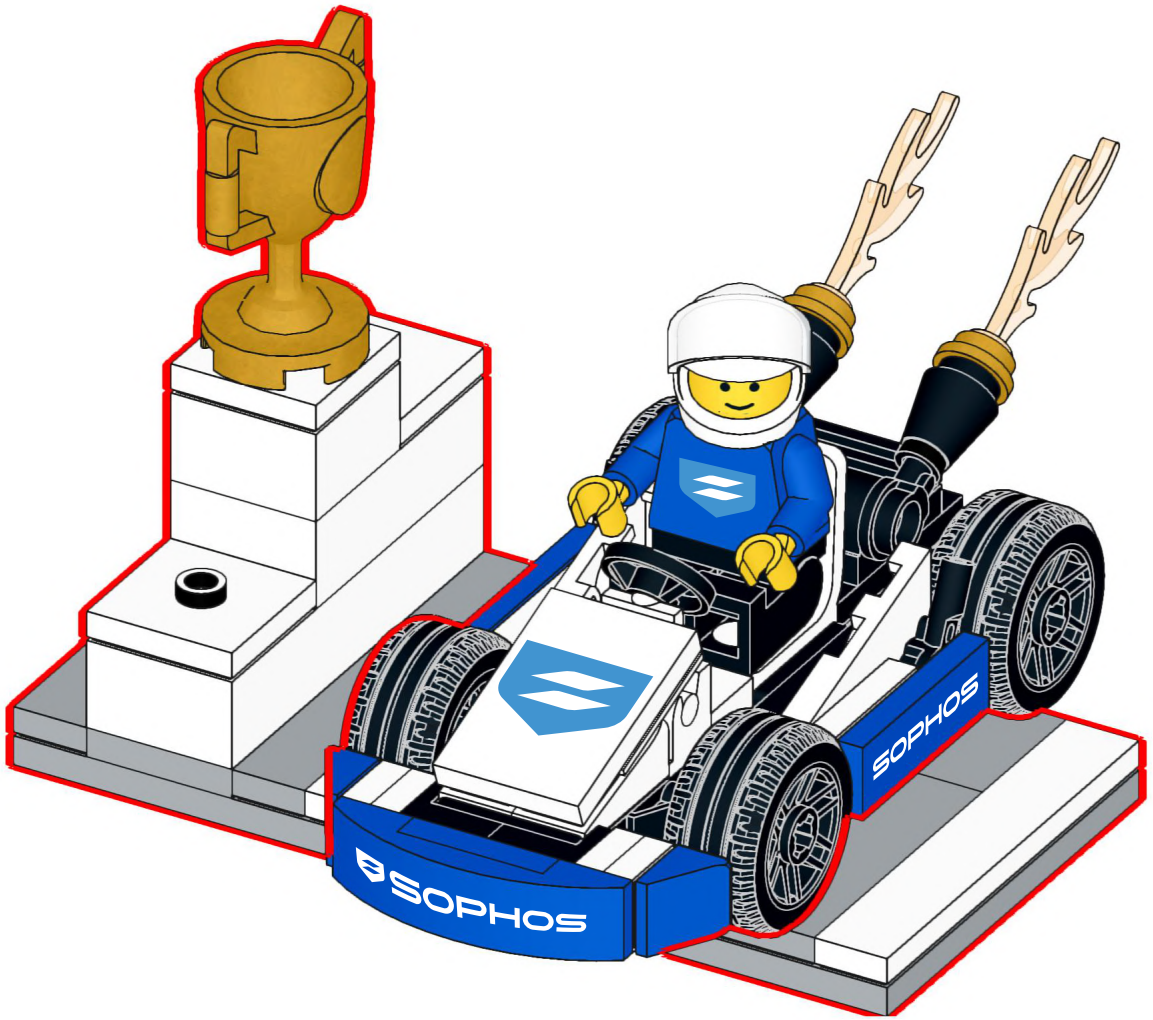
SOPHOS
SOPHOS


SOPHOS
SOPHOS

DD BRICKS

LEGO® is a trademark of the LEGO® Group of companies which does not sponsor, authorize or endorse any of our products, services or the ddbricks.com website.

The LEGO® Group is neither endorsing the modification in any way, shape or form, nor accepting any responsibility for unforeseen and/or adverse consequences following from the modification of their products.

www.ddbricks.com

DD Bricks Limited
88/112 Moo 15 Bangsaothong
Bangsaothong District,
Samutprakan, 10570 Thailand

Phone: +662 130 7624
Tax ID.: 0105560165611



WHO WE ARE

We are a German-based, multi-national team with a passion for creativity and innovation. With years of experience in our commitment to sustainability and quality.

We are now redefining the corporate gift space with custom LEGO® brick gifts that are memorable, impactful, and unique.

Catering to companies and working closely with leading distributors, we specialize in crafting thoughtful and innovative solutions that capture your brand's essence. From concept to delivery, every set we create tells a story, your story. From client appreciation to team-building activities, we craft impactful and memorable sets tailored to meet your specific needs.

WHO WE BUILD FOR

Custom LEGO® brick creations aren't just gifts; they're stories that connect and inspire. From employee onboarding kits and team-building rewards to trade show giveaways and milestone celebrations, we design each set to capture your unique purpose.

Across industries like technology, real estate, healthcare, and more, our LEGO® brick builds bring a sense of wonder and innovation to every occasion. Whether it's a branded model for your office or a token of appreciation for your clients, the possibilities are endless.



2x
4589b
Black



1x
2412b
Black



2x
34103
Black



2x
36841
Black

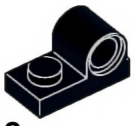

2x
11458
Black



2x
3623
Black



3x
35480
Black

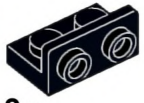

3x
99780
Black



4x
11209
Black



1x
972
Black



1x
970
Black



2x
11002
Black



1x
971
Black



4x
11208
Black



4x
32828
Black

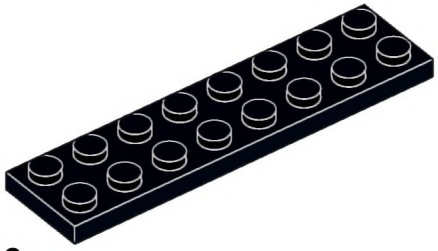

2x
3034
Black

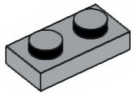

2x
3023
Light Bluish Gray

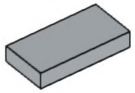

1x
3069
Light Bluish Gray

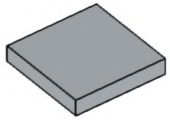

2x
3068
Light Bluish Gray

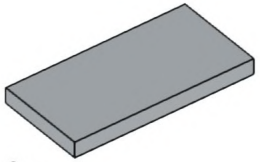

3x
87079
Light Bluish Gray

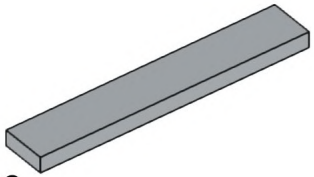

2x
6636
Light Bluish Gray

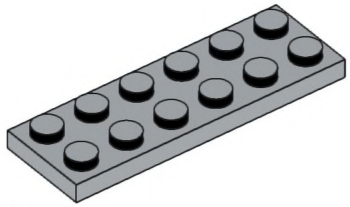

1x
3795
Light Bluish Gray

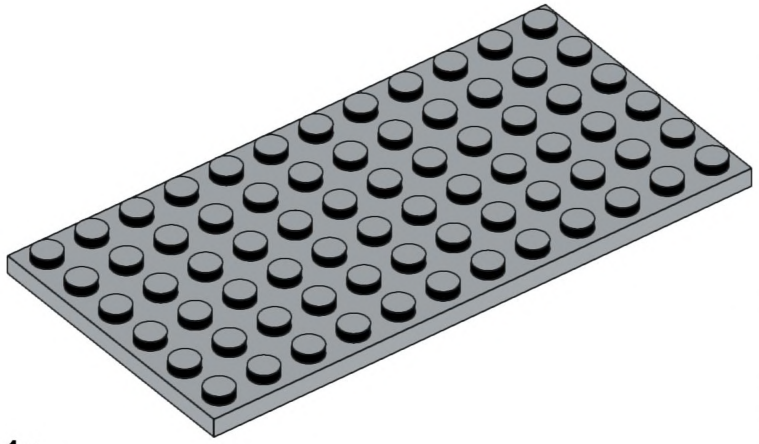

1x
3028
Light Bluish Gray



4x
3024
White

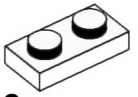

2x
3023
White



2x
61409
White

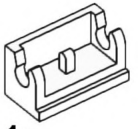

1x
3937
White

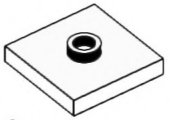

3x
87580
White



1x
2446
White

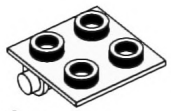

1x
6134
White

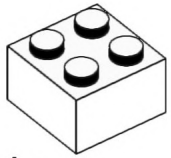

1x
3003
White

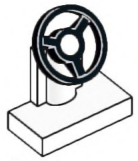

1x
3829c01
White

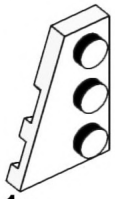

1x
43723
White

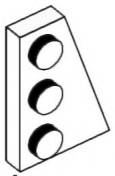

1x
43722
White

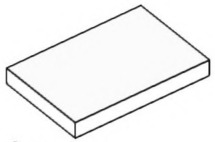

1x
26603
White



1x
4079
White

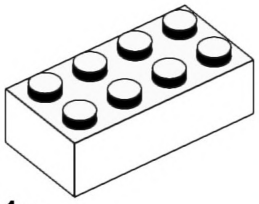

1x
3001
White

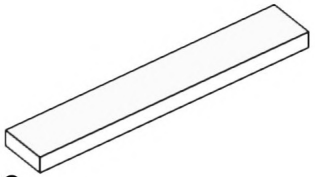

2x
6636
White

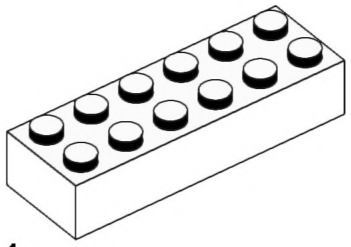

1x
2456
White



2x
983
Yellow



1x
3626p01
Yellow



2x
54200
Blue



1x
982
Blue



1x
981
Blue

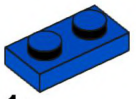

1x
3023
Blue

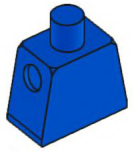

1x
973
Blue

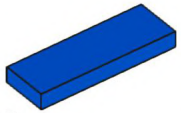

2x
63864
Blue

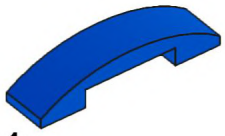

1x
93273
Blue



1x
2447
Trans-Clear



2x
6126b
Trans-Orange



2x
85861
Pearl Gold



1x
89801
Pearl Gold